Sl No.	Mark No.	Member	Section	Length	Qty./Set	Unit Wt	Wt/Pc	Wt/Set
				IN MM	No.s	KG/M or KG/Sq	Kgs	Kgs
1	CT-1	LEG	65x65x6	2309	2	5.8	13.392	26.78
2	CT-2	LEG	65x65x6	2309	2	5.8	13.392	26.78
3	CT-3	BASE PLT	16x175	175	4	125.6	3.847	15.39
4	CT-3a	STIFFENER	6x60	175	4	47.1	0.495	1.98
5	CT-3b	STIFFENER	6x60	175	14	47.1	0.495	6.93
6	CT-4	EARTH CLT	75x75x6	80	6	6.8	0.544	3.26
7	CT-5	BRACING	45x45x5	573	16	3.4	1.948	31.17
8	CT-5x	BRACING	45x45x5	573	4	3.4	1.948	7.79
9	CT-6	BRACING	45x45x5	350	16	3.4	1.19	19.04
10	CT-7	TOP SUPPORT	75x75x6	520	2	6.8	3.536	7.07
11	CT-8	TOP SUPPORT	75x75x6	350	2	6.8	2.38	4.76
TOTAL WEIGHT OF THE STRUCTURE EXCLUDING FASTENERS (IN KG):								150.95

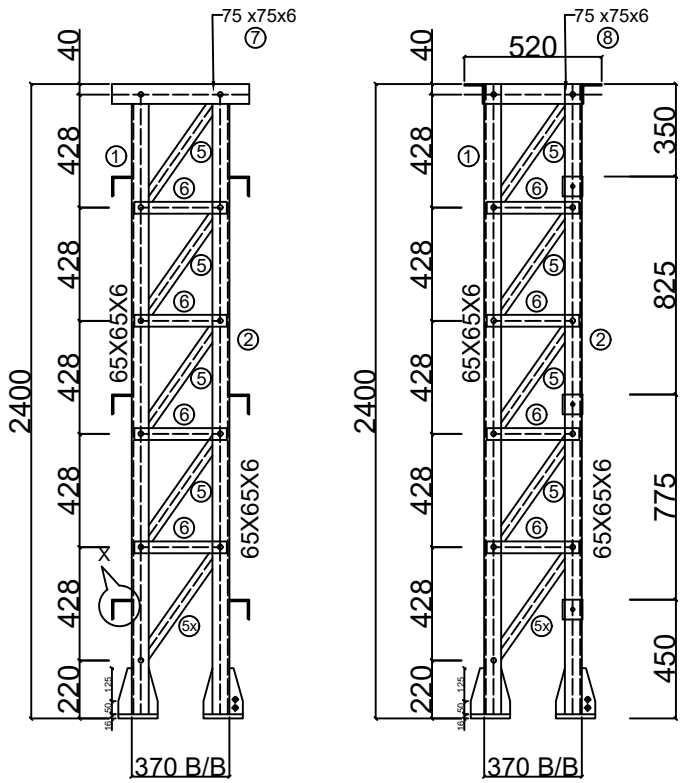

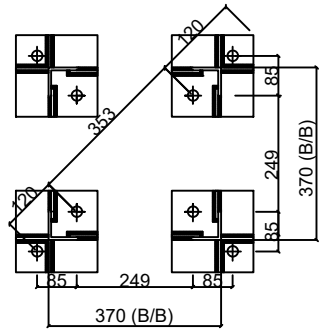

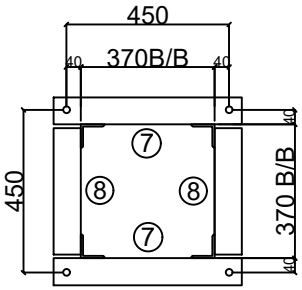

View B-B

Note:

1. **All the dimensions are in mm.**
2. **The Mounting details shall be as per the approved equipment drawing.**

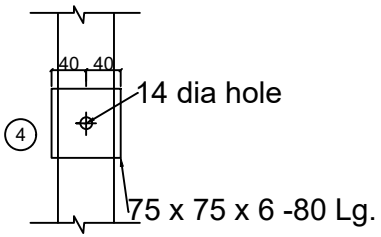

View C-C

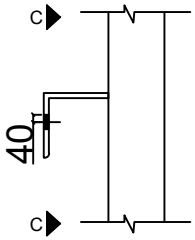

Detail-X

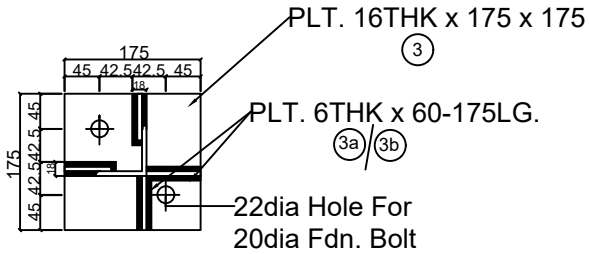

DETAILS OF BASE PLATE

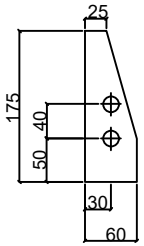

Mark 3a

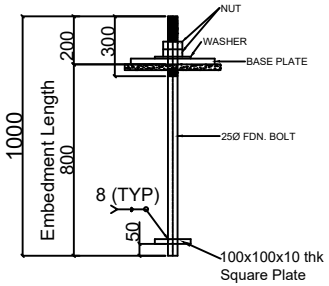

20MM DIA FOUNDATION BOLT

DRAWING:-	EQUIPMENT SUPPORT STRUCTURE FOR 132 KV CT